StG3+ECON-4

TECHNICAL DATA SHEET



Standard
DK100 / StG3 -StG3+





Speciale MAN® serie E32
KT-80-405-12-NRG

Combination of ECON-4 / SC100 speed controller with StG3 actuator

To use a throttle with integrated brushless Heinzmann actuator StG3 / StG3+ together with speed govenor ComAp ECON-4 / Motortech SC100 it is needed to adjust properly the configuration over WinScope software.

Basic Parameters

1. Run WINSCOPE software and connect to ECON-4 / SC100

2 Open Setpoints window

"Main PID"	
Actuator type	ActType 1
PWM rate	6000 Hz
"ActType 1"	
Act gain	10,0 %
Act int	10,0 %
Act der	10,0 %
Act MaxCur Act	50,0 %
MaxCurDel Act	5,0 s
ReducedCur	25 %
Wiring	BRIDGE
"Analog Sensors"	
Fdb 0 pos	0,4V
Fdb 100 pos	4,6V

enjoy high quality

StG3+ECON-4

TECHNICAL DATA SHEET

Wiring the devices

Please locate jumper P21 and link 2 pins from the right side (5V-link)

ECON-4/SC-100	STG3
S1.3 ACTS1.4	DRV- (pin4)
ACT+	DRV+ (pin6)
S2.2 Fdb supp	+5V (pin1)
S2.3 Fdb GND	0V (pin2)
S2.1 ACT Fdb	A-FB (pin3)
EARTH/GND	SHLD

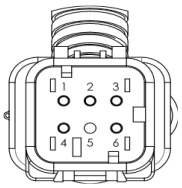

ECON-4 and StG3 pin assignment

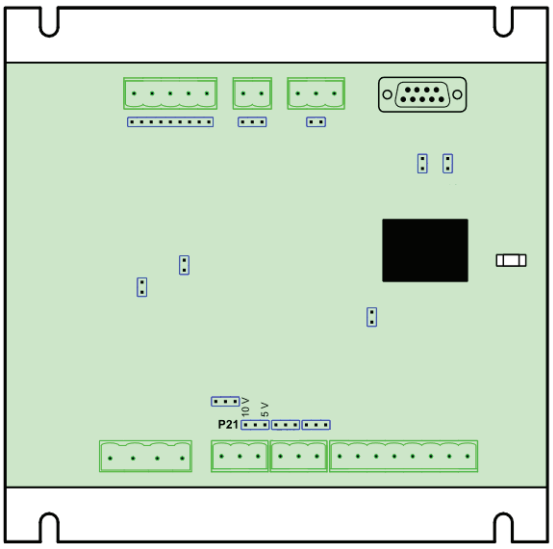

ECON-4 Feedback Supply Voltage Jumper Position

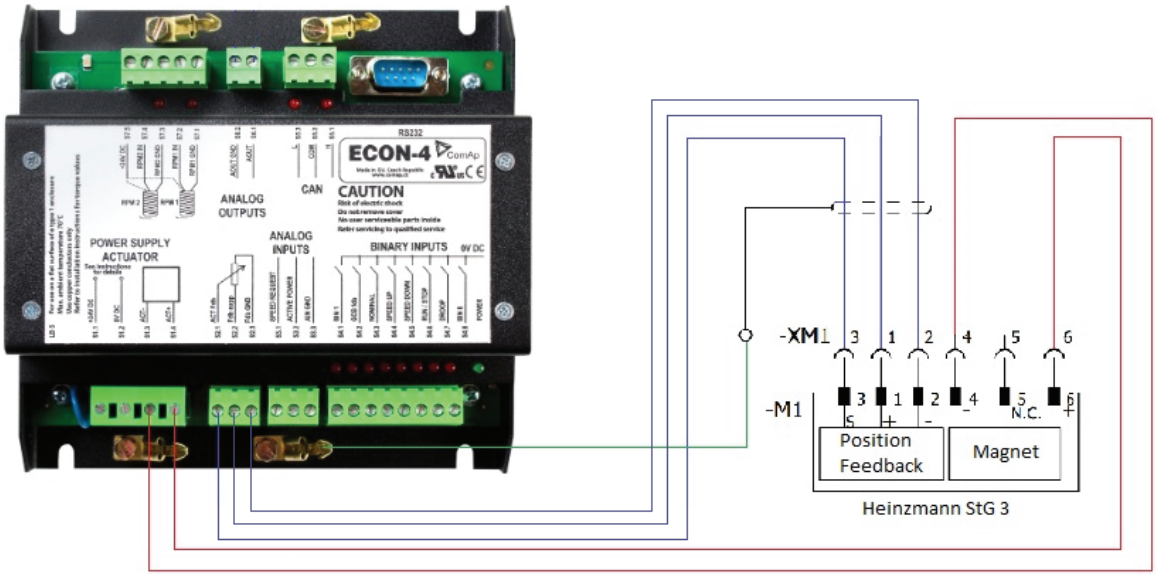

Wiring StG3/StG3+ with Comap ECON-4

As the last step please change mode to MANUAL and change parameter Main PID: Act position from 0 to 10, 20, 30, .. 100 and check the response of the actuator (via feedback signal in WinScope). In case the response is too lazy or too fast, then update the corresponding "Act gain", "Act int" and "Act der" parameters in "ActType1" to get required response.

enjoy high quality