133LE IRIDAM Spark plug

TECHNICAL DATA SHEET

Sizes

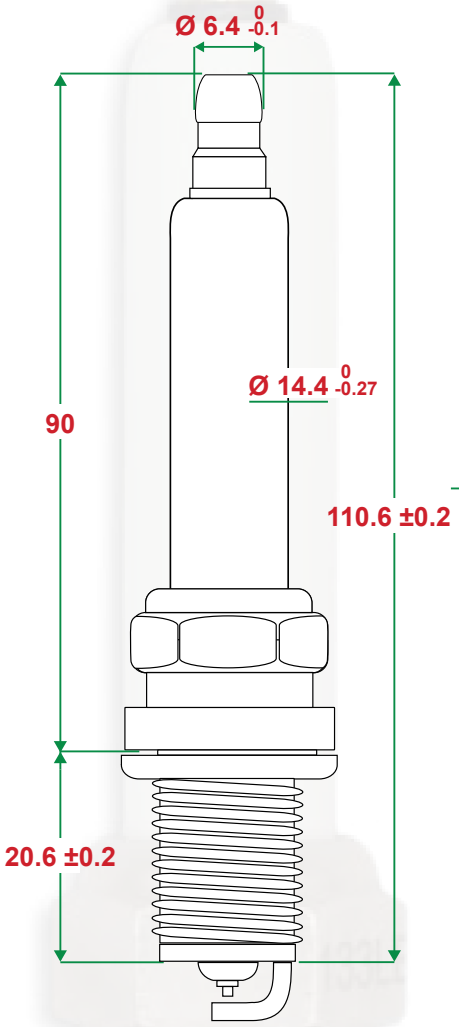

J-type
Electrods: Ir / Ir

Thread

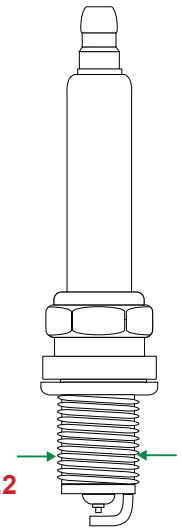

M18x1.5

Hex size

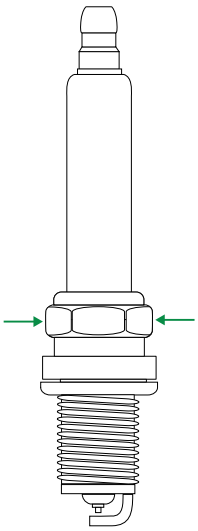

20.8mm

Reach

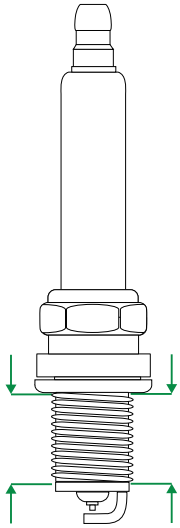

20.6mm
13/16”

Gap

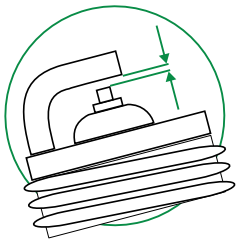

0.305±0.05mm

Tightening Torque



with lubricant **30 Nm**
no lubricant **45 Nm**



Cross Reference

DENSO	GL3-1 / GL3-5
BOSCH	7308 MR3DII360

enjoy high quality

Designed in EU

DISTRIBUTION
NRG Italy S.r.l.
nrgitaly.energy
MADE IN PRC

* Product features may change without notice

NRG Italy S.r.l. unipersonale - Via Luigi Pirandello 4/6 - 24030 Mapello (BG) Italy

nrgitaly.energy

ACTIVE POWER