285IR IRIDAM Spark plug

TECHNICAL DATA SHEET

Sizes

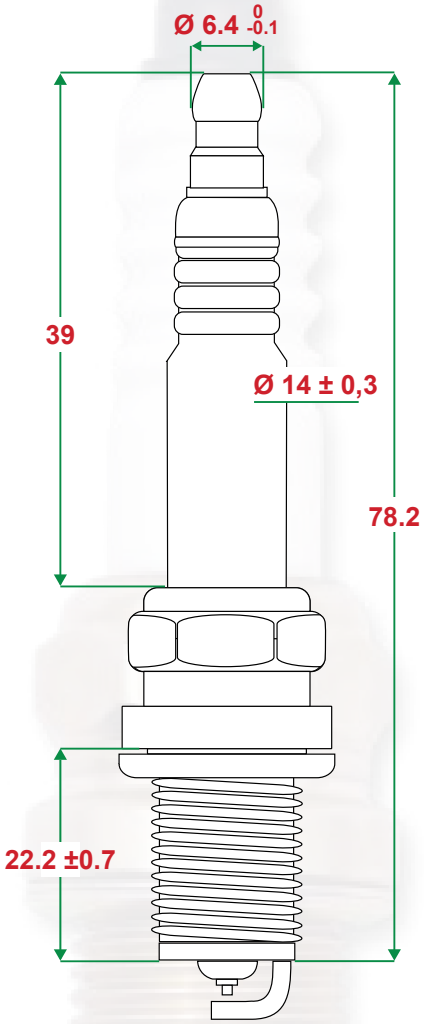

J-type oppure Pre-Chamber
Double Iridium

Thread

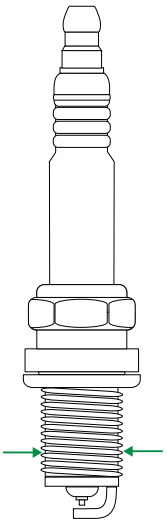

M14x1.25

Hex size

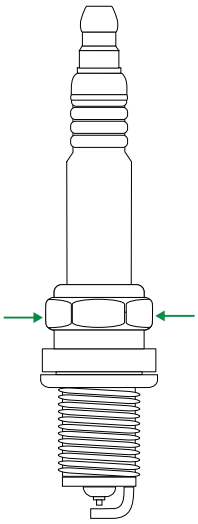

16 0 -0.27 mm

Reach

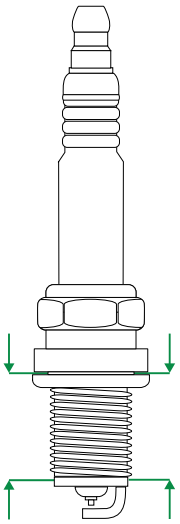

19±0.2mm

Gap

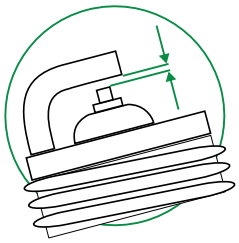

0.305±0.05mm

Tightening Torque



with lubricant **20 Nm**
no lubricant **30 Nm**



Cross Reference

DENSO	GK3-5
BOSCH	7322 FR3CII360
FEDERAL MOGUL/BERU	14FR-4DIU
CHAMPION	RC78PYP

enjoy high quality

Designed in EU

DISTRIBUTION
NRG Italy S.r.l.
nrgitaly.energy
MADE IN PRC

* Product features may change without notice