Gas Power
Industrial Gas Engine Parts and Services

Gas Power is a renowned supplier of engine control systems and accessories, as well as original engine components. We have extensive experience in the industrial gas engine market, as well as in the production and service of equipment using generators or cogeneration units powered by natural gas, landfill gas, sewage gas and biogas.

GAS MIXER - Series 200 / Series 140



DATA SHEET

Description

One of our flagship products are gas mixers with annular adjustable gap available in 3 different cross-section variants. They produce the right gas-air mixture in a controlled and precise manner needed for optimal engine operation. They cover the power range from 100 kW to 500 kW.
Stability and repeatability of the delivered dose are achieved in the Venturi-type mixing channel. This solution has low pressure losses and guarantees a homogeneous mixture over

Gas Power
Industrial Gas Engine Parts and Services

Dimensions:

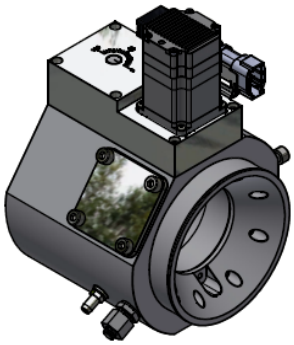

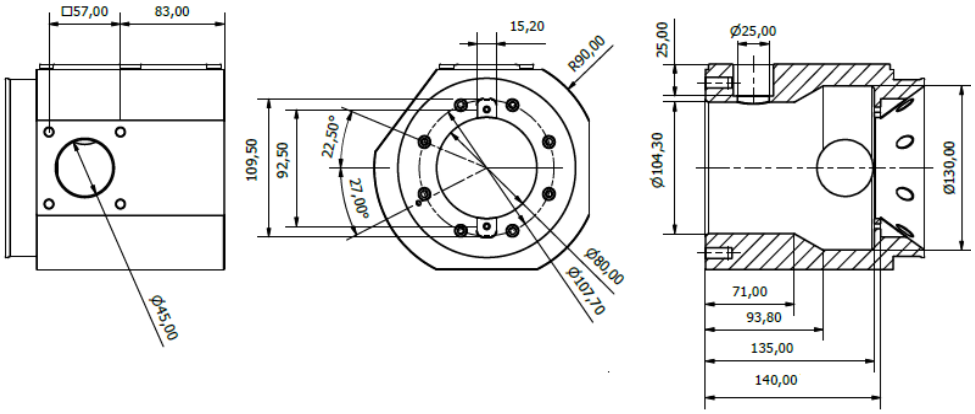

Series 140

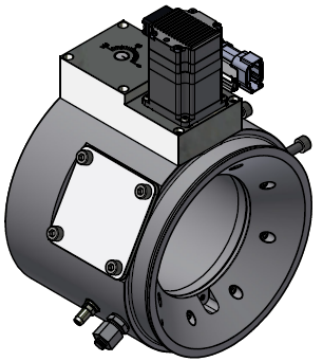

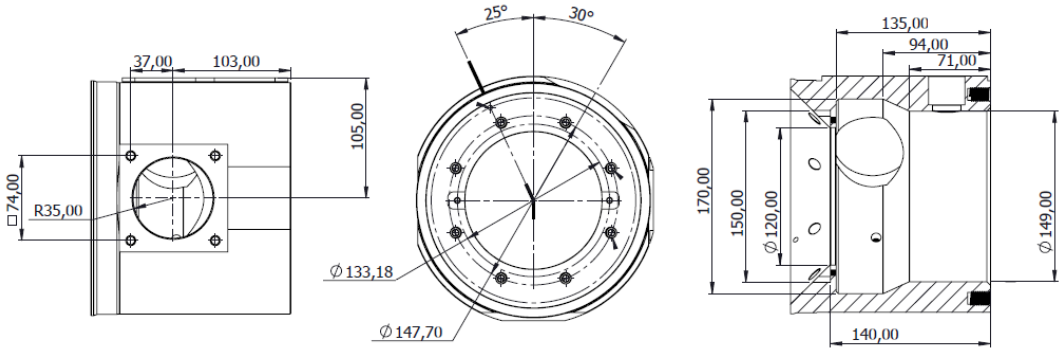

Series 200

- for engines with natural gas, biogas and low-calorie fuels.

Gas Power
Industrial Gas Engine Parts and Services

Features:

- solid and compact design,
- lightweight construction
- integrated PCB for third party control units
- maintenance-free design
- minimal pressure loss due to the Venturi nozzle design
- stability and repeatability of the administered dose
- fast response time
- full automation of the mixing proces
- no impact of vibrations and high temperatures on work
- high level of process security
- integrated engine control module
- easy to install, set up and use
- clear gap size indicator
- Possibility to connect different cross-sections of inlet and outlet pipes
- failure-free

Technical data

Operating range	Engine power 110 … Approx. 500kW
Types of gas	Natural gas, waste dump gas, Biogas, propane
Input power supply	12-48 VDC, current ≥3A
Operating voltage range	12 … 32 VDC
Setpoint input	4 … 20 mA, (CAN Option – coming soon)
Setpoint feedback	4 …20mA
Protections	Overvoltage, Overcurrent, Tracking Error
Display	Equipment-on indicator lamp: correctness displaying (green LED), error displaying (red LED when input signal >21mA or <3mA),
Diagnosis/programming	Via serial interface with adapter
Upcoming Communication Interface:	CAN ,RS485 on request
Upcoming Communication protocols:	CAN ,CANOpen ,Modbus RTU
Connection	8P Amphenol connector
Operation temperature: Storage temperature:	-20 ˚C to +70˚C -25 ˚C to +95˚C (electronics)
Operation humidity:	20%RH to +90%RH

Storage humidity:	15%RH to + 95%RH
Vibration strength	+/- 1mm at 1 … 20 Hz, Max. 0.24m/s at 21 … 63 Hz, Max. 9 g at 64 … 2000Hz (data according to Heinzmann GMA)
Shock resistance	30 g, 11 ms half-sine
Weight	approx. 9.8 kg

Standards

CE Declaration

ATEX (in preparation)