# 778IR IRIDAM Spark plug

## TECHNICAL DATA SHEET

### Sizes

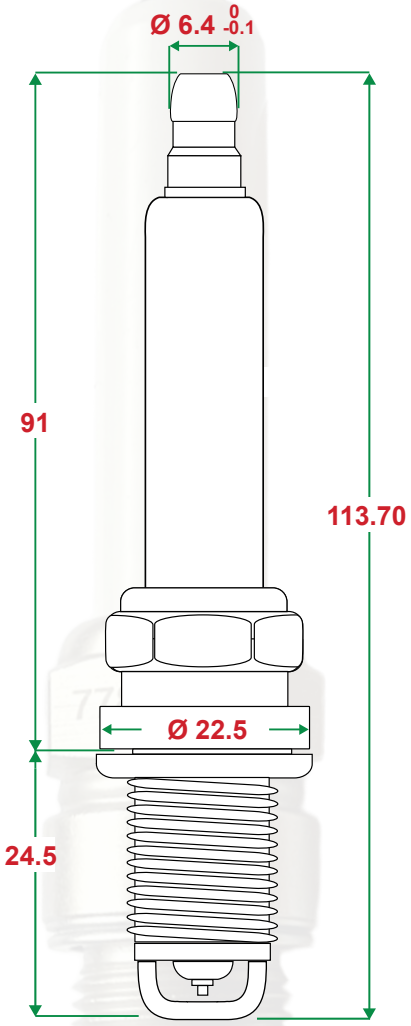


### Thread

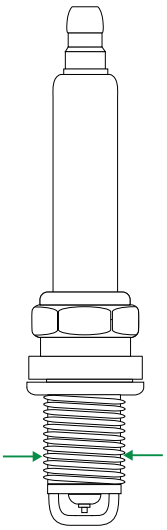

M18x1.5

### Hex size

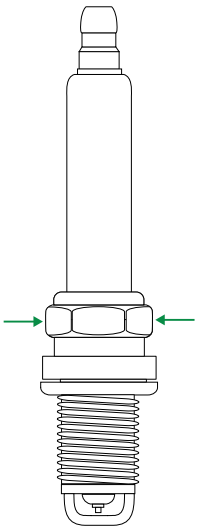

22.2 mm

### Reach

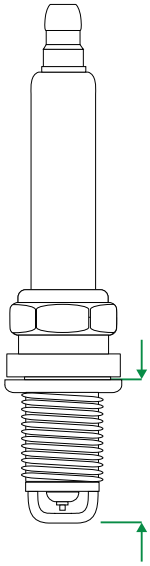

24.5 mm




### Gap

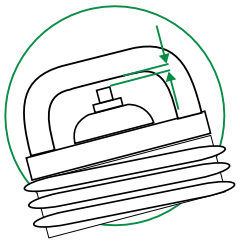

0.35 ±0.05mm

### Tightening Torque



with lubricant **50 Nm**
no lubricant **45 Nm**

## Cross Reference

| | |
|---|---|
| CHAMPION | FB78WW |
| BERGEN ENGINES | 710875 |
| WARTSILA | PABA209982 |

*enjoy high quality*

Designed in EU

DISTRIBUTION
NRG Italy S.r.l.
nrgitaly.energy
MADE IN PRC

**NRG Italy S.r.l.** unipersonale - Via Luigi Pirandello 4/6 - 24030 Mapello (BG) Italy

nrgitaly.energy

* Product features may change without notice

POWER ACTIVE